ELECTRICAL CONNECTION DIAGRAM
PUMP AND SAFETY RELAY CONNECTIONS

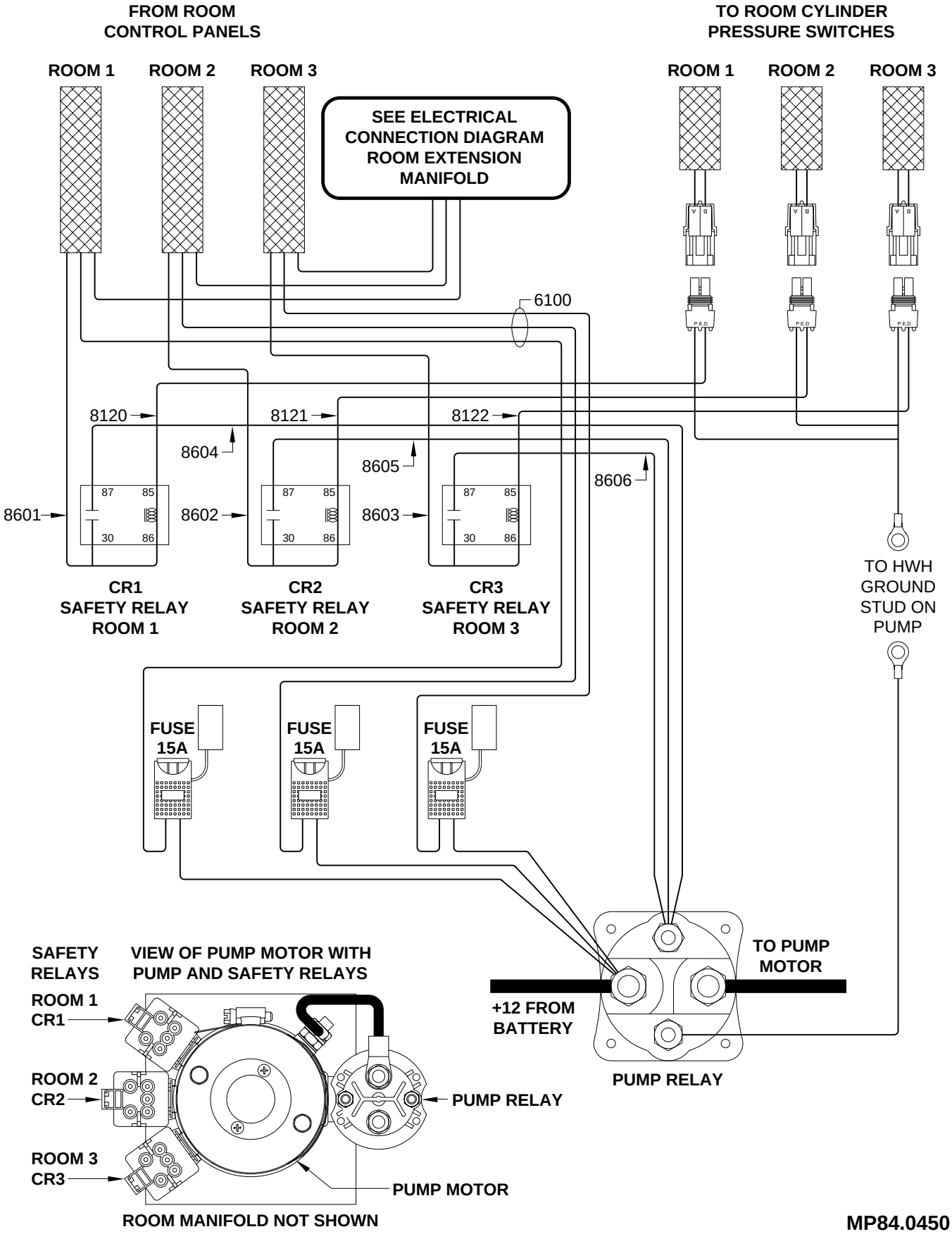

MP84.0450
15SEP08